Operator's Manual
Original Operating
Instructions

Rolling High-Wheel String Trimmer 600050 Series

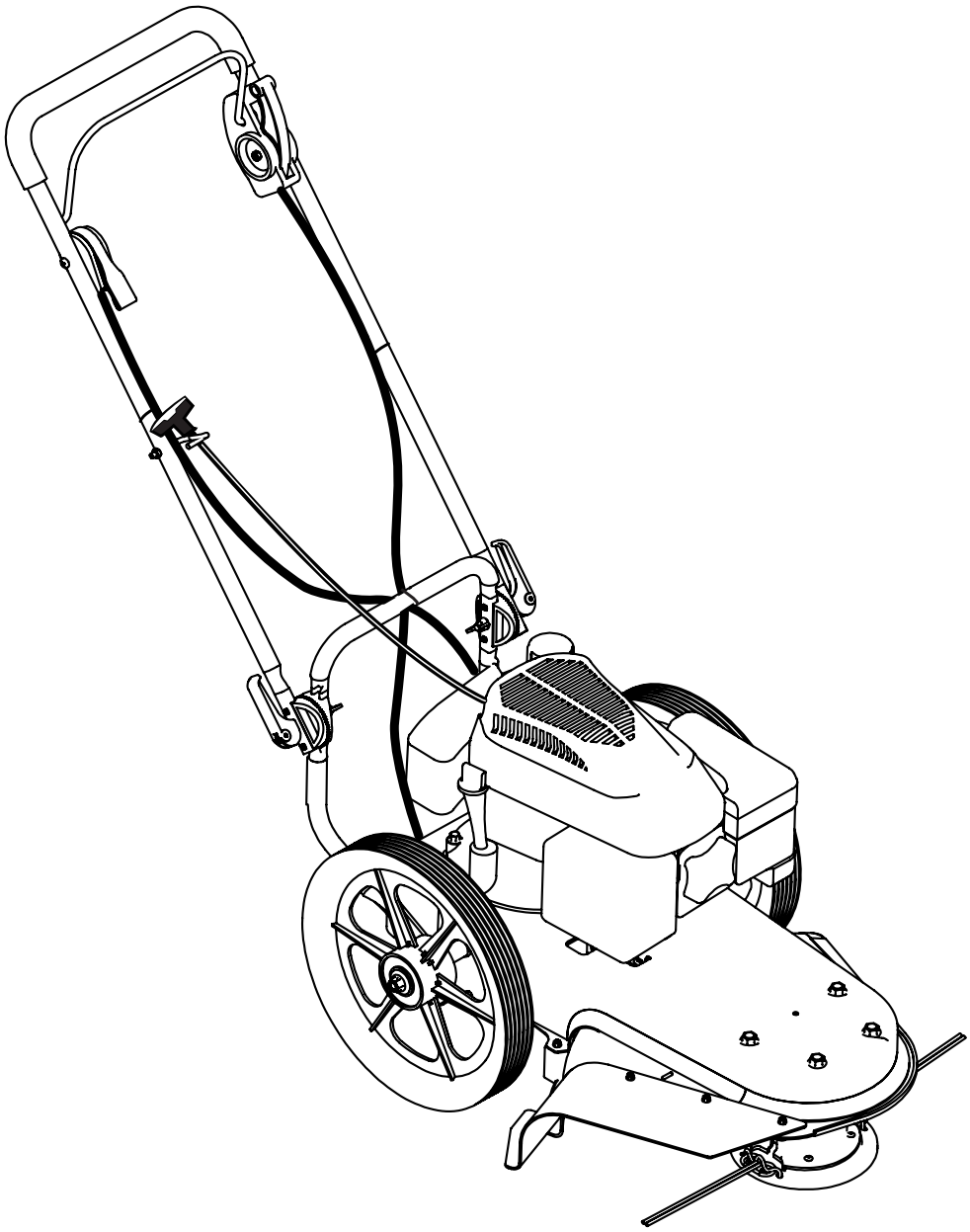

INCLUDES MODELS:

600050V (pictured)
600050B
600050BCE

Get parts online at
www.GetEarthquake.com

P/N 19989
Revised 06/13/11

INTRODUCTION

Congratulations on your investment in quality. Thank you for purchasing an Earthquake String Trimmer from Earthquake. We have worked to ensure that the string trimmer meets the highest standards for usability and durability. With proper care, your string trimmer will provide many years of service.

Please read this entire manual before installation and use. Earthquake reserves the right to change, alter or improve the product and this document at any time without prior notice.

CONTENTS

Introduction/Contents/Registration 2
Warnings and Safety Precautions 3-6
Features 7
Assembly 8-9
Operation 10-11
Maintenance, Service and Storage 12-17
Maintenance 12
Servicing and Adjustment 13-15
Storage 16
Troubleshooting 17
Slope Guide 18
Parts Breakdown 19-22
Warranty 23
CE Declaration of Conformity 24

REGISTRATION, SERVICE AND MAINTENANCE LOG

Record the model number and serial number in the space provided for easy reference. Warranty is valid only if the completed registration is received by Earthquake within 30 days of purchase. You can register your warranty online by visiting www.getearthquake.com. If you do not have a computer, call our customer service department at (800) 345-6007 Mondays through Fridays from 8 a.m. to 5 p.m. CST.

OWNERSHIP RECORDS		
Owner's Name:		
Owner's Address:		
City:	State/Province:	Zip Code/Postal Code:
Model Number:	Serial Number:	
Date of Purchase:		
Notes:		

This instruction book contains information for several models. Read and keep this book for future reference. This book contains important information on SAFETY, ASSEMBLY, OPERATION, AND MAINTENANCE. The owner must be certain that all the product information is included with the unit. This information includes the INSTRUCTION BOOKS, the REPLACEMENT PARTS and the WARRANTIES. This information must be included to make sure state laws and other laws are followed.

WARNINGS AND SAFETY PRECAUTIONS

OWNER'S RESPONSIBILITY

Accurate assembly and safe and effective use of the string trimmer is the owner's responsibility.

- Read and follow all safety instructions.
- Carefully follow all assembly instructions.
- Maintain the string trimmer according to directions and schedule included in this Earthquake operator's manual.
- Ensure that anyone who uses the string trimmer is familiar with all controls and safety precautions.

NOTE: All images shown in this manual of your rolling string trimmer are of 600050V. The 600050B/600050BCE models have slight variations.

SPECIAL MESSAGES

Your manual contains special messages to bring attention to potential safety concerns, machine damage as well as helpful operating and servicing information. Please read all the information carefully to avoid injury and machine damage.

NOTE: General information is given throughout the manual that may help the operator in the operation or service of the machine.

This symbol points out important safety instructions which if not followed could endanger your personal safety. Read and follow all instructions in this manual before attempting to operate this equipment.

BEFORE OPERATING ENGINE:

Please read this section carefully. Read entire operating and maintenance instructions AND the entire engine manual which accompanies this product. Failure to follow instructions could result in serious injury or death. Operate the string trimmer according to the safety instructions outlined here and inserted throughout the text. Anyone who uses this string trimmer must read the instructions and be familiar with the controls.

WARNING

WARNING INDICATES A HAZARD WHICH, IF NOT AVOIDED, COULD RESULT IN DEATH OR SERIOUS INJURY AND/OR PROPERTY DAMAGE.

CAUTION

CAUTION INDICATES YOU CAN BE HURT OR YOUR EQUIPMENT DAMAGED IF THE SAFETY INSTRUCTIONS THAT FOLLOW THIS SIGNAL WORD ARE NOT OBEYED.

IMPORTANT

INDICATES HELPFUL INFORMATION FOR PROPER ASSEMBLY, OPERATION, OR MAINTENANCE OF YOUR EQUIPMENT.

WARNING

CALIFORNIA PROPOSITION 65 WARNING

ENGINE EXHAUST FROM THIS PRODUCT CONTAINS CHEMICALS KNOWN TO THE STATE OF CALIFORNIA TO CAUSE CANCER, BIRTH DEFECTS, OR OTHER REPRODUCTIVE HARM.

WARNING

THIS CUTTING MACHINE IS CAPABLE OF THROWING OBJECTS.

WARNING

DEBRIS THROWN FROM THE TRIMMER CAN RESULT IN FOREIGN OBJECTS BEING THROWN INTO THE EYES, WHICH CAN CAUSE SEVERE EYE DAMAGE AND INJURY. ALWAYS WEAR SAFETY GLASSES OR EYE SHIELDS WHEN OPERATING THE TRIMMER.

IF YOU WEAR EYE GLASSES, PUT A WIDE VISION SAFETY MASK OVER THEM.

CE INTENDED USE / FORESEEABLE MISUSE

This is a motorized string trimmer that cuts long grasses and weeds. It is pedestrian-controlled, but not self-propelled. It has a petrol-fuelled internal combustion engine that powers the cutting head. It shall not be used for any other purpose.

GENERAL SAFETY RULES

- Read, understand, and follow all instructions on the machine and in the manual(s). Be thoroughly familiar with the controls and the proper use of the trimmer before starting.
- Familiarize yourself with all of the safety and operating decals on this equipment and on any of its attachments or accessories.
- Do not put hands or feet near or under rotating parts.
- Only allow responsible individuals, who are familiar with the instructions, to operate the trimmer.
- Thoroughly inspect the area where the machine is to be used and remove all foreign objects. Your equipment can propel small objects at high speed causing personal injury or property damage. Stay away from breakable objects, such as house windows, automobile, greenhouses, etc.
- Keep the area of operation clear of all persons, particularly small children, and pets.
- Wear appropriate clothing such as a long-sleeved shirt or jacket. Also wear long trousers or slacks. Do not wear shorts.
- Do not wear loose clothing or jewelry. They can get caught in moving parts.
- Always wear safety goggles or safety glasses with side shields when operating trimmer to protect your eyes from foreign objects which can be thrown from the unit.
- Always wear work gloves and sturdy footwear. Wear footwear that will improve footing on slippery surfaces. Leather work shoes or short boots work well for most people. These will protect the operator's ankles and shins from small sticks, splinters, and other debris.
- It is advisable to wear protective headgear to prevent the possibility of being struck by small flying particles, or being struck by low hanging branches, twigs, or other objects which may be unnoticed by the operator.
- Do not operate the trimmer without proper guards or other safety protective devices in place.
- Use this equipment for its intended purpose only.
- See manufacturer's instructions for proper operation and installation of accessories. Only use accessories approved by the manufacturer.
- Operate only in daylight or good artificial light.
- Do not operate product when fatigued or under the influence of alcohol, drugs or other medication which can cause drowsiness or affect your ability to operate this machine safely.
- Never operate trimmer in wet grass. Always be sure of your footing; keep a firm hold on the handle and walk; never run.
- Before each use, inspect the throttle control lever and cable. Make sure that the cable is free and that the lever is not damaged. Also check the cable linkage running to the carburetor for kinks, loose fittings, and obstructions. Verify that the control bail is working properly.
- Stop the rotating trimmer head when crossing gravel drives, walks, or roads. Wait for the cutting lines to stop rotating.
- Watch for traffic when operating near, or when crossing roads.
- Stop the engine (motor) whenever you leave the equipment, before cleaning, repairing or inspecting the unit, be sure the trimmer head and all moving parts have stopped. Let the engine cool, disconnect the spark plug wire and move it away from the spark plug.
- If the equipment should start to vibrate abnormally, stop the engine (motor), disconnect the spark plug wire and prevent it from touching the spark plug. Check immediately for cause. Vibration is generally a warning of trouble.
- After striking a foreign object, stop the engine (motor). Remove the wire from the spark plug. Inspect the trimmer for damage. If damaged, repair before starting and operating the trimmer.
- Never leave the trimmer unattended when the engine is running. Remove the wire from the spark plug.
- Regularly inspect the trimmer. Make sure parts are not bent, damaged or loose.
- Allow muffler and engine areas to cool before touching. Never pick up or carry the trimmer while the engine is running.
- Prolonged exposure to noise and vibration from gasoline engine powered equipment should be avoided. Take intermittent breaks and/or wear ear protection from engine noise as well as heavy work gloves to reduce vibration in the hands.
- Check local regulations for age restrictions on use of this machine.
- If the noise or vibrations of the machine increase, stop immediately and perform an inspection.
- Do not change the engine governor settings or over-speed the engine.
- The fuel used in this machine is considered extremely flammable and should be handled with care. When storing extra fuel be sure that it is in an appropriate container and away from any fire hazards.
- When moving the packaged machine, always do so with a partner.
- The packaged product may be stored on a pallet. It should be no more than 2 boxes wide and 4 boxes high for a total of 8 boxes on a pallet. A forklift should be used to move the pallet.

SLOPE OPERATION

Slopes are a major factor related to slip and fall accidents which can result in severe injury. All slopes require extra caution. If you feel uneasy on a slope, do not trim it. Do trim across the face of slopes; never up and down. Do not trim excessively steep slopes (maximum 15 degrees) or areas where the ground is very rough. See the "Slope Guide" in the back of this manual to check a slope. Exercise extreme caution when changing direction on slopes.

- Remove objects such as rocks, tree limbs, etc.
- Watch for holes, ruts, or bumps. Tall grass can hide obstacles.
- Do not trim near drop-offs, ditches, or embankments. The operator could lose footing or balance.
- Do not trim excessively steep slopes.
- Do not trim on wet grass. Reduced footing could cause slipping.

CHILDREN

Tragic accidents can occur if the operator is not alert to the presence of children. Children are often attracted to the trimmer and the trimming activity. Never assume that children will remain where you last saw them.

- Keep children out of the trimming area and under the watchful care of a responsible adult.
- Be alert and turn trimmer off if children enter the area.
- Before and while moving backwards, look behind and down for small children.
- Never allow children to operate the trimmer.
- Use extra care when approaching blind corners, shrubs, trees, or other objects that may obscure vision.

SERVICE

- Use extra care in handling gasoline and other fuels. They are flammable and vapors are explosive.
  - Use only an approved container.
  - Never remove gas cap or add fuel with the engine running. Allow engine to cool before refueling. Do not smoke.
  - Fill fuel tank outdoors with extreme care. Never fill fuel tank indoors or near appliances with pilot lights, heaters, or other ignition sources. Replace fuel cap securely. If fuel is spilled, do not start the engine but move product and fuel container from area. Clean up spilled fuel and allow to evaporate.
  - Never store the machine or fuel container inside where there is an open flame (such as a water heater), or other ignition source.
  - If the fuel has to be drained, this should be done outdoors. The drained fuel should be stored in a container specifically designed for fuel storage or it should be disposed of carefully.
- **Engines give off carbon monoxide, an odorless, colorless, poison gas. Breathing carbon monoxide can cause nausea, fainting or death.** Always start and run engine outdoors. Do not start or run engine in an enclosed area, even if doors or windows are open.
- Never make adjustments or repairs with the engine (motor) running. Disconnect the spark plug wire, and keep the wire away from the plug to prevent accidental starting (remove the ignition key if equipped with an electric start). Always wear eye protection when you make adjustments or repairs.
- Check the trimmer head and engine mounting bolts at frequent intervals for proper tightness.
- Keep all nuts and bolts tight and keep equipment in good condition. Check mounting hardware on trimmer head every time you change trimmer line and prior to each use.
- Never tamper with safety devices. Check their proper operation regularly.
- When servicing or repairing the trimmer, do not tip the machine over or up unless specifically instructed to do so in this Manual. Service and repair procedures can be done with the trimmer in an upright position. Some procedures will be easier if the machine is lifted on a raised platform or working surface.
- To reduce fire hazard, keep trimmer free of grass, leaves, or other debris build-up. Clean up oil or fuel spillage. Allow trimmer to cool before storing.
- Stop and inspect the equipment if you strike an object. Repair, if necessary, before restarting.
- Always disconnect spark plug wire before cleaning, repairing, or adjusting.
- Do not change the engine governor setting or over-speed the engine.
- Clean and replace safety and instruction decals as necessary.
- To guard against engine over-heating, always have engine debris filter mounted and clean.
- Inspect trimmer before storage. When not in use, disconnect spark plug lead and store indoors in a dry place locked or otherwise inaccessible to children.
- Use only original equipment or authorized replacement parts.
- Never replace the cutting lines with metal parts.
- When storing gasoline or equipment with fuel in the tank, store away from furnaces, stoves, water heaters or other appliances that have a pilot light or other ignition source because they can ignite gasoline vapors.

SAFETY DECALS AND WARNINGS

Pictured below are safety and hazard symbols on the unit or in this manual. Before you operate your unit, learn and understand the purpose for each symbol.

A B C D E F

G H I J K L

M N O

HAZARD SYMBOLS AND MEANINGS

A: Warning!

B: Read Owner's Manual Before Operating Machine

C: Do Not Operate While Others Are Around

D: Remove Objects that Could Be Thrown By This Machine.

E: Never Operate Machine Up and Down Slopes, ALWAYS Operate Trimmer Across Slopes

F: Be Aware of Moving and Rotating Parts

G: Wear Ear and Eye Protection At All Times

H: Do Not Service or Adjust Moving Parts Unless Engine is Stopped and Spark Plug Wire is Disconnected.

I: Direction of Rotating Trimmer Lines

J: Toxic Fumes—Do Not Operate in Unventilated Areas

K: Hot Surfaces

L: Fire Hazards.

M. Do Not Use In Thunderstorms--For severe weather, stop operation of this machine and seek shelter.

N. Team Lift--For your safety, always have at least two people when lifting this machine.

O. Never Fit Metal Cutting Parts--Do not attach any metal parts to the cutting head of this machine.

CONTROL AND OPERATING SYMBOLS

Pictured below are control and operating symbols on the unit or in this manual. Before you operate your unit, learn and understand the purpose for each symbol.

NAMEPLATE DETAILS

ARDISAM, INC.
1160 8th Avenue | Cumberland, WI 54829 | USA

Serial No.

LBLINFO600050BCE

Model: **600050BCE** Type: **Trimmer**
Year: **2011** Mass: **30.3 kg**
Max. Operating Speed: **3600 rpm**

SOUND AND VIBRATION LEVELS

Model	600050BCE
2006/42/EC Operator Ear L_{PA} (dBA)	84
2006/42/EC Sound Power Level L_{WA} (dBA)	102.3
2006/42/EC Hand/Arm Vibration Max m/s²	5.4
2006/42/EC Vibration Time Limit	EAV= 1h 43mins. ELV= 6h 52mins.

Sound levels tested in accordance with ISO 3744 & ISO 11094-Grade 2 (Engineering) Method. Readings taken with engine at full throttle. EAV= Exposure Action Value, ELV= Exposure Limit Value

SPARE PARTS

Only use approved Earthquake spares.

FEATURES

Read this owner's manual and safety rules before operating your trimmer. Take time to compare the following illustration with the trimmer to familiarize yourself with the product and its controls.

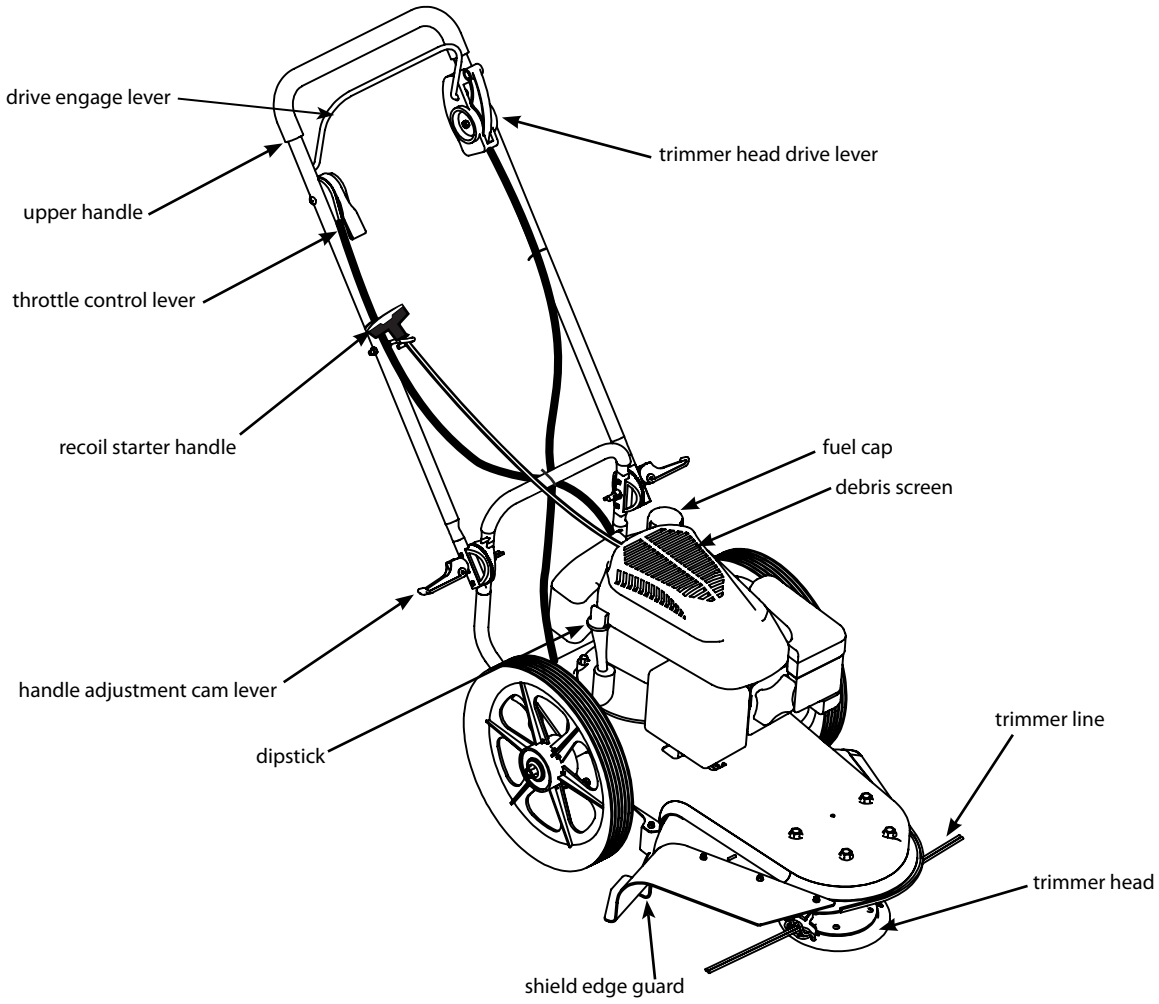

Figure 1 : Your new string trimmer

Trimmer Head Drive Lever - Engages the rotation of the trimmer head.

Control Bail - Release to stop the rotation of the trimmer head.

Throttle Control Lever - Controls the speed or stops the engine.

Primer Button - Injects fuel directly into the carburetor manifold for faster starts (600050B models only)

Recoil Starter Handle - The engine is equipped with an easy pull recoil starter.

Shield Edge Guard - Protects the shield by automatically cutting the line to the correct length.

SPECIFICATIONS

Trimmer Line Diameter: 0.155 inches

Trimmer Line Length: 21.5 inches

Wheel Diameter: 14"

ASSEMBLY

Tools Required:

1 Knife to cut carton

1 Wrench to assemble tires

Contents of Part Bag (PB6000502)

Owner's manual
Engine manual
Warranty card
Replacement trimmer line
L-handle allen wrench
Spark plug wrench (600050V only)
Safety glasses

To Remove the Trimmer from the Carton

1. Remove any of the loose parts in packaging, including the parts bags, from the carton.
2. Remove the packing material positioned around the unit.
3 Cut down all four corners of the carton and lay the side panels flat.
4. Pull the trimmer out of the carton.

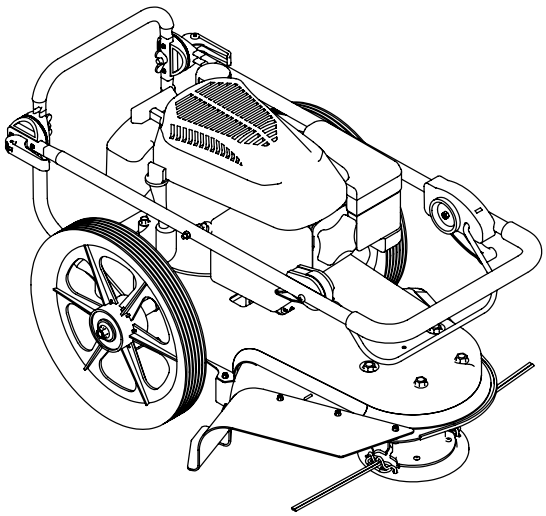

Figure 2: Your new trimmer as it is shipped to you.

WARNING

ALWAYS WEAR SAFETY GLASSES OR EYE SHIELDS WHILE ASSEMBLING THE TRIMMER.

WARNING

BEFORE DOING ANY ASSEMBLY OR MAINTENANCE TO THE TRIMMER, REMOVE THE WIRE FROM THE SPARK PLUG.

How to Raise the Handle

1. Hold the handle with one hand and loosen both handle adjustment cams until the ratchet teeth are disengaged. Do not remove the handle adjustment levers.
2. Raise the handle to the operating position.
3. Stand in the operator's position behind the trimmer. Put the handle in a comfortable position. Make sure both sides of the handle are level.

   NOTE: Make sure the cables are not caught between the upper and lower handle.
4. Tighten the handle adjustment levers. Make sure the handle pivots are locked in place.

   NOTE: The handle height is adjustable. See "How To Adjust The Height Of The Handle" in the Service and Adjustment section.
5. To attach the recoil start handle to the rope guide, twist the rope through the rope guide mounted on the right side of the handle. **SEE FIGURE 3.**

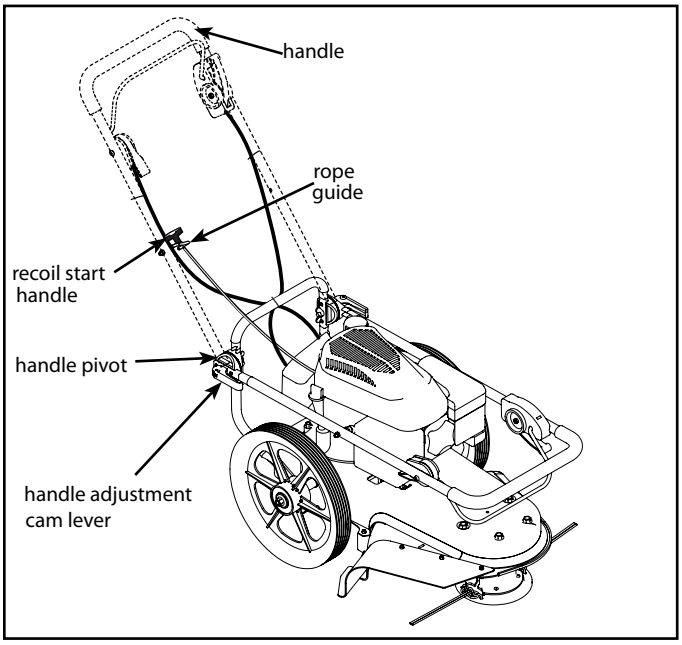

Figure 3: Adjusting the handle bars.

⚠ WARNING

FOLLOW THE ENGINE MANUFACTURER'S INSTRUCTIONS FOR THE TYPE OF GASOLINE AND OIL TO USE.

ALWAYS USE A SAFETY GASOLINE CONTAINER. DO NOT SMOKE WHEN ADDING GASOLINE TO THE ENGINE.

WHEN INSIDE AN ENCLOSURE, DO NOT FILL WITH GASOLINE. BEFORE YOU ADD GASOLINE, STOP THE ENGINE. LET THE ENGINE COOL FOR SEVERAL MINUTES.

ENGINE PREPARATION

See the engine manufacturer's instructions for the type of gasoline and oil to use. Before you use the unit, read the information on safety, operation, maintenance, and storage.

NOTE: Engine does not contain OIL or GASOLINE.

Fill Crankcase With Oil

1. Remove the oil fill cap/dipstick. **SEE FIGURE 4.** Fill the crankcase to the FULL line on oil fill cap/dipstick. **DO NOT OVERFILL.**
2. Install the oil fill cap/dipstick and tighten securely.

Fill Fuel Tank With Gasoline

See the engine manufacturer's instructions for the type of gasoline to use.

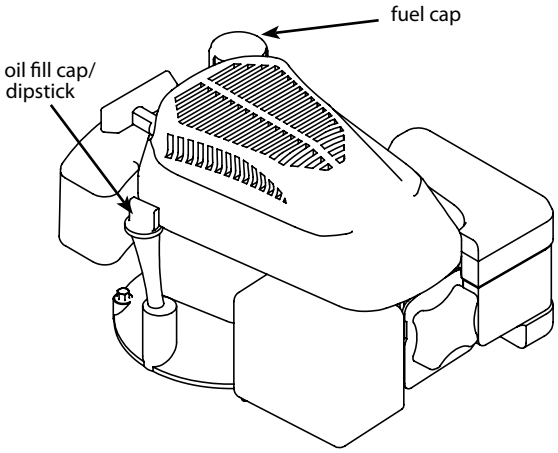

Figure 4: Filling the engine with fuel and oil.

OPERATION

How to Stop the Trimmer Head

Release the control bail. It will return to its open position and disengage the trimmer head.

How to Stop the Engine

Move the throttle control lever completely back to the STOP position.

How to Use the Trimmer Head Drive Lever

1. To engage the trimmer head, hold the control bail against the handle. Move the trimmer head drive lever forward to engage the trimmer head. The faster the engine runs, the faster the trimmer head will rotate. **SEE FIGURE 5.**
2. Once the trimmer head is rotating, push the trimmer forward to trim.

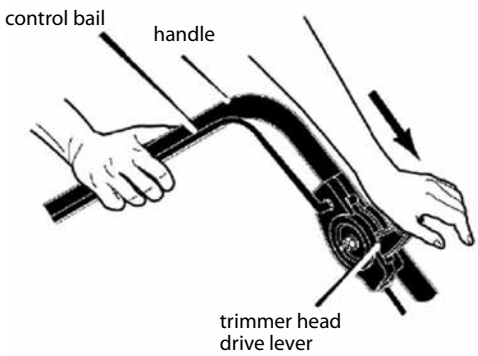

Figure 5: Using the trimmer head drive lever

⚠ WARNING

THE TRIMMER HEAD WILL CONTINUE TO ROTATE FOR SEVERAL SECONDS AFTER THE ENGINE HAS STOPPED.

⚠ CAUTION

IMPROPER TREATMENT OF THE STRING TRIMMER CAN DAMAGE IT AND SHORTEN ITS LIFE.

- **DO NOT ATTEMPT TO CRANK OR START THE ENGINE BEFORE IT HAS BEEN PROPERLY SERVICED WITH THE RECOMMENDED OIL. THIS MAY RESULT IN AN ENGINE FAILURE.**

How to Use the Throttle Control

1. During normal use, set the throttle control lever in the FAST position to run the engine at full speed. **SEE FIGURE 6.**
2. Pull the throttle control lever back to decrease engine speed. Push the throttle control lever forward to increase engine speed.
3. To stop the engine, pull the throttle control lever completely back to the stop position.

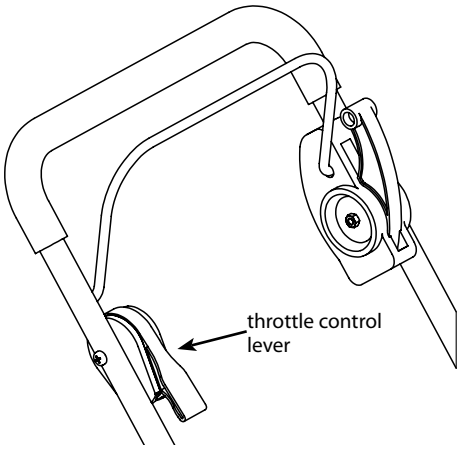

Figure 6: Using the throttle control

How to Use the Primer Button (600050B/600050BCE only)

1. Push the primer button five times. Wait approximately two seconds between each push.

   NOTE: Do not use the primer button to restart a warm engine after a short shutdown.

How to Start the Engine

NOTE: DO NOT BE ALARMED, your engine will smoke the first time it is started. It is burning off the protective coating that is on the internal engine parts.

1. Before each use, remove debris from the debris screen. **SEE FIGURE 1 IN "FEATURES" SECTION**. Debris can cause the engine to overheat. Wipe the debris screen with a cloth or paper towel.
2. Move the throttle control lever forward to the START or FAST position.
3. **FOR 600050B/600050BCE:** To start a cold engine, push the primer button five times. Wait two seconds between each push of the primer button.

   NOTE: Do not use the primer to start a warm engine.
4. Firmly hold the recoil starter handle with your right hand. **SEE FIGURE 7.**

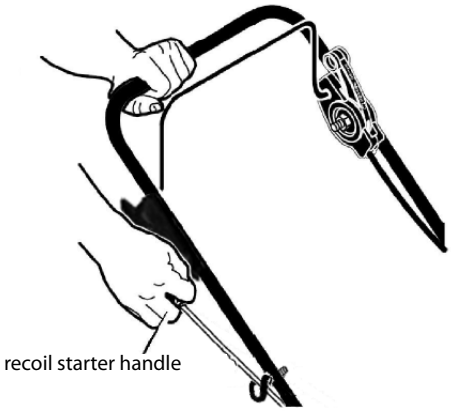

Figure 7: Using the recoil starter handle to start the engine.

5. Pull back sharply on the recoil starter handle. **DO NOT allow the starter rope to snap back. Let the starter rope slowly rewind as you hold the recoil starter handle.**

   TIP: On 600050B and 600050BCE models, if the engine fails to start after three pulls, push the primer button two times and pull the recoil starter handle again.

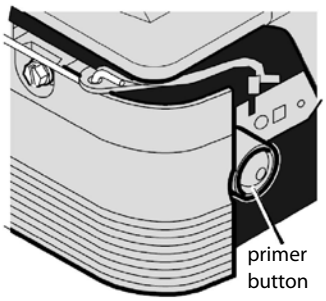

Figure 8: Primer Button

⚠ WARNING

NEVER LEAVE THE TRIMMER UNATTENDED WHILE THE ENGINE IS RUNNING. WAIT FOR THE TRIMMER LINES TO STOP ROTATING.

⚠ WARNING

NEVER RUN THE ENGINE INDOORS OR IN A POORLY VENTILATED AREA. ENGINE EXHAUST CONTAINS CARBON MONOXIDE, AN ODORLESS AND DEADLY GAS. KEEP HANDS, FEET, HAIR AND LOOSE CLOTHING AWAY FROM THE TRIMMER AND ANY MOVING PARTS ON THE ENGINE. AVOID TOUCHING THE MUFFLER AND SURROUNDING AREAS. TEMPERATURES MAY EXCEED 150 DEGREES FAHRENHEIT.

⚠ WARNING

DEBRIS SUCH AS STICKS, GRAVEL OR ROCKS CAN BE THROWN WITH SUFFICIENT FORCE TO CAUSE PERSONAL INJURY OR PROPERTY DAMAGE.

Trimmer Tips

- Set the throttle control in the FAST position. If the weeds or grass are tall and thick, operate the trimmer at a slower walking speed.
- Frequently clean the underside of the trimmer to remove any grass build up. See the "Maintenance, Service and Storage" section for details.
- For best results and longer lasting line, use the ends of the line to do the cutting. This is easily done by moving slowly through very thick or heavy weeds.
- If the trimmer lines become too short, it will take longer to complete the job. If the trimmer lines are worn to less than half their original length, change to a new trimmer line. See more on how to replace the trimmer line in the "Maintenance, Service and Storage" section.
- Do not trim on excessively steep slopes. If a slope is difficult to stand on, do not trim. Do not trim on slopes when the ground is slippery or wet. Trim across the face of a slope, not up and down.
- Trimmer head contact to concrete, asphalt and harder surfaces may create premature wear to the height guide.

MAINTENANCE, SERVICE, AND STORAGE

Maintenance, replacement or repair of the emissions control devices and systems may be performed by any non-road engine repair establishment or individuals. However, items must be serviced by an authorized dealer to obtain "no charge" emissions control service.

Good maintenance is essential for safe, economical and trouble-free operation. It will also help reduce air pollution.

Maintenance Schedule

Service Records	Before Each Use	Every 25 Hours	As Noted	Service Date
Check engine oil level	X			
Check trimmer lines	X		1	
Check trimmer head engagement	X			
Engine/machine cleaning	X		2	
Check nuts and bolts	X			
Check spark plug		X		
Change engine oil*		X		
Service air filter*		X	3	
Lubricate jackshaft assembly		X		
Lubricate wheel bearings		X		

Note 1 - When old line is half the original length, replace with new line.
Note 2 - Clean daily if used in extremely dusty or dirty conditions.
Note 3 - Change more often if used in extremely dusty or dirty conditions.
**** To service the air filter and change the oil in the 600050V model, you must remove the wheels on the string trimmer.***

General Recommendations

The warranty on this trimmer does not cover items that have been subjected to operator abuse or negligence. To receive full value from the warranty, the operator must maintain the trimmer as instructed in this manual.

Some adjustments must be made periodically to properly maintain your trimmer. All adjustments in the "Service and Adjustments" section of this manual must be checked at least once each season.

SERVICE AND ADJUSTMENT

How to Change Engine Oil

Change the engine oil when the engine is warm. For the proper oil capacity, see the engine manufacturer's instructions. **SEE FIGURES 9 and 10.**

NOTE: In order to change the oil in the 600050V string trimmer model, you must remove the wheel.

1. Disconnect spark plug wire from the spark plug.
2. Remove the oil drain plug as shown in Figure 10.
3. Drain all the engine oil into a flat pan.
4. Install the oil drain plug. Make sure the oil drain plug is tight.
5. Remove the dipstick.
6. Fill the engine crankcase. **DO NOT OVERFILL.** For proper oil capacity, see the engine manufacturer's instructions.
7. Connect the spark plug wire to the spark lug.

How to Replace the Trimmer Line

For the best performance, use a heavy gauge (0.155" diameter) trimmer line. Cut the length of the trimmer line to 21.5". Use the length guide, located on the shield, to make sure the trimmer line is the correct length.

Do not allow the length of the lines to vary more than one inch. This is important to make sure the trimmer head is balanced and does not vibrate.

NOTE: To extend the life of the trimmer line, keep the trimmer line moist. If not kept moist, the nylon trimmer line will become dry and brittle. Keep extra trimmer line in a can of water. The line will then stay flexible and easy to change. A flexible line will also last much longer.

1. Stop the engine. Wait for all moving parts to stop.
2. Remove the worn trimmer line from the line retainer.
3. First, thread the ends of the new trimmer line through the outside loops. **SEE FIGURE 11.**
4. Next, take the ends of the line, cross over the line retainer, and thread the ends through the center hold. **SEE FIGURE 12.**
5. Then, check to make sure that the ends of the line are even. **SEE FIGURE 13.**

⚠ WARNING

BEFORE YOU INSPECT, CLEAN OR SERVICE THE TRIMMER, STOP THE ENGINE. MAKE SURE THAT ALL MOVING PARTS HAVE STOPPED. DISCONNECT THE WIRE FROM THE SPARK PLUG.

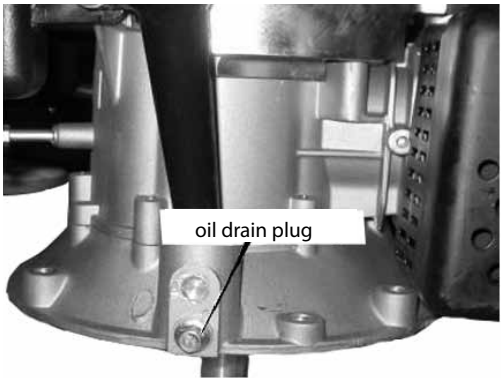

Figure 9: Oil drain plug on 600050V

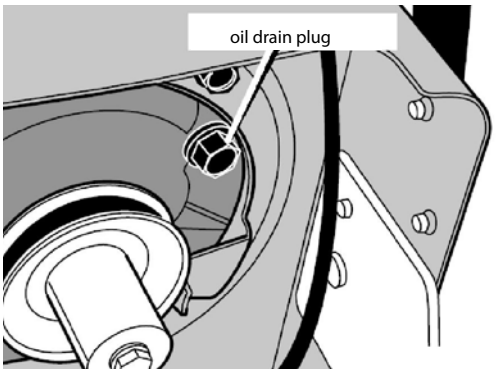

Figure 10: Oil drain plug on 600050B/600050BCE

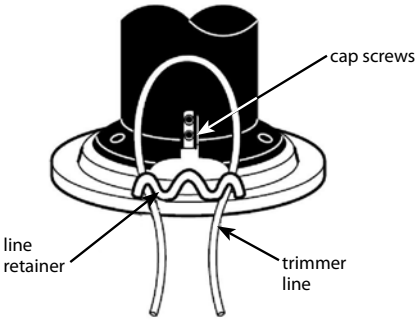

Figure 11: Threading the new trimmer line.

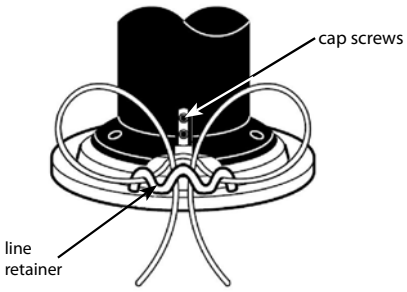

Figure 12: Threading trimmer line through center hold.

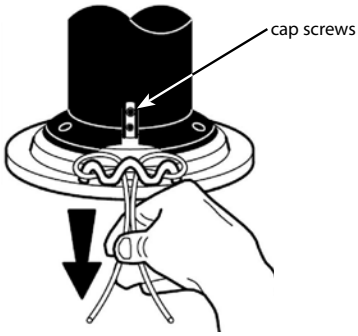

Figure 13: Check ends of line

To Detach the Tires

To detach the tires, loosen the axle nuts and remove the wheel, spacer and washer. Reverse instructions to reattach tire. **SEE FIGURE 14.**

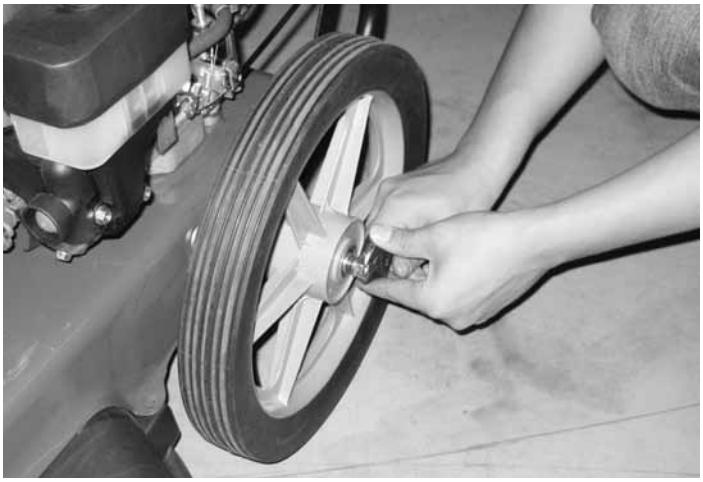

Figure 14: Detaching tires

How to Adjust the Height/Angle of the Handle

Use the cam levers on each side of the handle to adjust the height of the handle. **SEE FIGURE 15.**

1. Hold the handle with one hand and open both cam levers until the ratchet teeth are disengaged. Do not remove the nuts.
2. Move the handle up or down to the desired position, then align the ratchet teeth. Make sure both sides of the handle are level.
3. Tighten (lock) the lever.

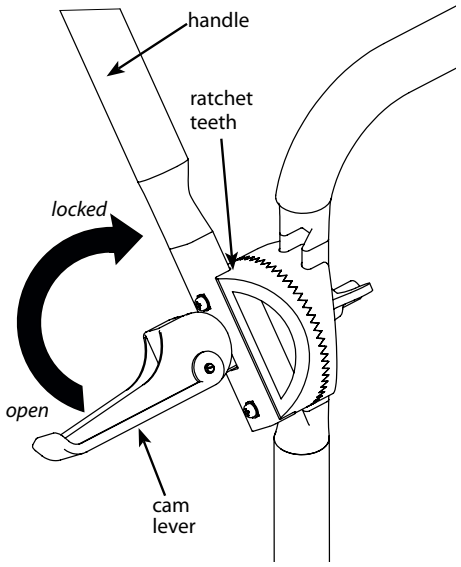

Figure 15: Adjusting the height of the handle. (Lever shown in OPEN position)

⚠ WARNING

BEFORE YOU SET THE HEIGHT OF THE CUT, STOP THE ENGINE. WAIT FOR ALL MOVING PARTS TO STOP. ALLOW THE ENGINE TO COOL AND DISCONNECT THE SPARK PLUG WIRE.

How to Set the Height of the Cut

The height of the cut can be set from 1-1/2 inches to three (3) inches. The recommended cutting height for the average yard is two (2) inches. **SEE FIGURE 16.**

1. Use the L-handle wrench found in the parts bag to loosen the socket head cap screws shown in the figure below.
   NOTE: There are two socket head cap screws.
2. Set the trimmer head at the desired height.
3. Tighten the socket head cap screws.

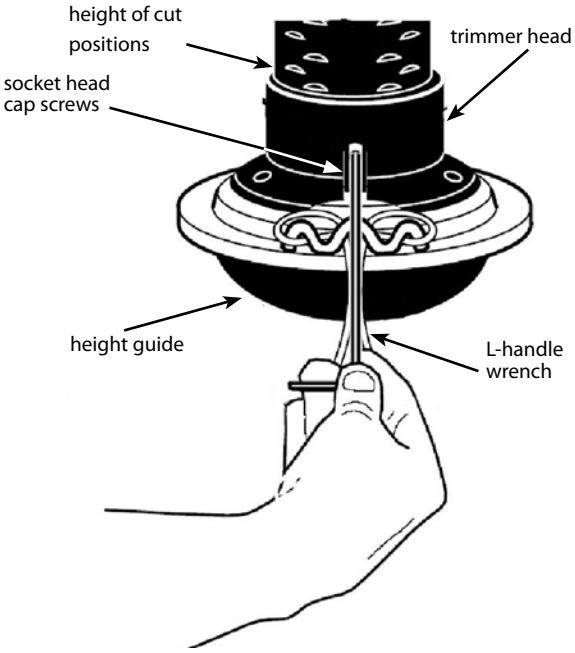

Figure 16: Setting the height of your cut.

How to Replace the Drive Belt

To replace the drive belt, the trimmer head and shield must be removed as explained below. **SEE FIGURES 17 AND 18.**

1. Remove the two fasteners that hold the rear of the shield to the trimmer housing.
2. Remove the four fasteners that hold the front of the shield and trimmer head to the trimmer housing.
3. Remove the "V" pulley from the idler bracket.
4. Raise the front of the trimmer housing and remove the drive belt.
   * On some models, it is necessary to loosen the mounting bolt for the drive pulley to remove the drive belt . Do not bend the belt guides.

   NOTE: Use only OEM replacement belts.

5. To assemble the drive belt, reverse the above steps. Make sure all fasteners are tight. Make sure the mounting bolt for the drive pulley is tight.
6. Check the routing of the drive belt. Make sure the drive belt is inside of all belt guides as shown.

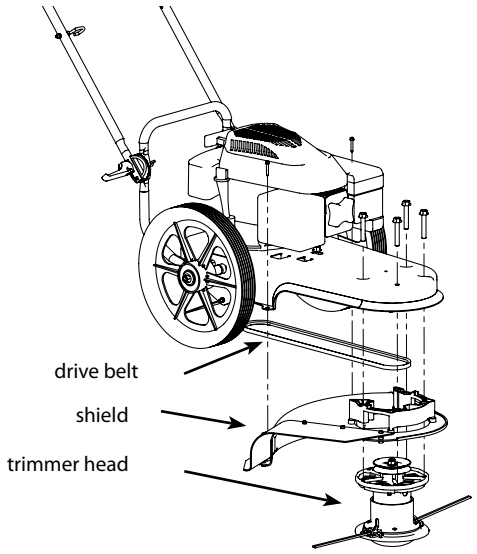

Figure 17: Trimmer housing

⚠ WARNING

BEFORE YOU REMOVE THE DRIVE BELT, DISCONNECT THE WIRE FROM THE SPARK PLUG.

⚠ IMPORTANT

TEST THE DRIVE SYSTEM. START THE ENGINE AND MOVE THE THROTTLE CONTROL TO THE FAST POSITION. ENGAGE AND DISENGAGE THE TRIMMER HEAD SEVERAL TIMES. WHEN DISENGAGED, MAKE SURE THE TRIMMER HEAD COMPLETELY STOPS WHEN RESTING ON THE GROUND. IF THE TRIMMER HEAD CONTINUES TO ROTATE, TAKE THE TRIMMER TO AN AUTHORIZED SERVICE CENTER.

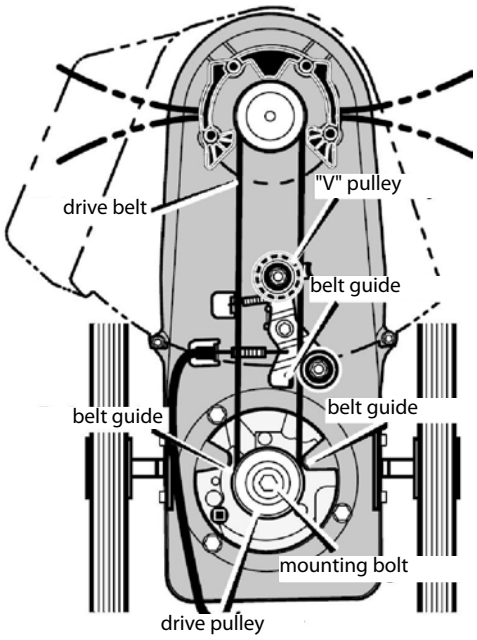

Figure 18: Routing the drive belt

STORAGE

When the trimmer is put in storage for thirty days or more, follow the steps below to make sure the trimmer is in good condition the following season.

Trimmer:

Completely clean the trimmer

Put the trimmer in a building that has good ventilation.

NOTE: A yearly check-up or tune-up at an authorized service dealer will ensure that the trimmer will provide maximum performance for the next season.

Engine:

IMPORTANT NOTE: It is important to prevent gum deposits from forming in fuel system parts such as the carburetor, fuel filter, fuel hose, and tank during storage. Also, using alcohol blended fuels (called gasohol, ethanol or methanol) can attract moisture which leads to separation and formation of acids during storage. Acidic gas can damage the fuel system of an engine while in storage.

1. Drain all gasoline from the fuel tank. Let the engine run until it is out of gasoline. If you do not want to remove gasoline, add a fuel stabilizer to any gasoline left in the tank. A fuel stabilizer will minimize the formation of gum deposits and acids. If the tank is almost empty, mix the fuel stabilizer with fresh gasoline in a separate container and add the mixture to the tank. Always follow the instructions on the stabilizer container. Run the engine at least ten minutes after stabilizer is added to allow the mixture to reach the carburetor.
2. Drain the oil from a warm engine. Fill the engine crankcase with new oil.
3. Remove the spark plug from the cylinder. Pour one ounce of oil into the cylinder. Slowly pull the recoil starter handle so that the oil will protect the cylinder. Install a new spark plug in the cylinder.
4. Completely clean the trimmer, including dirt and debris from the cylinder cooling fins and the engine housing.
5. When not in use, disconnect spark plug lead and store in a well-ventilated area inaccessible to children.

⚠ WARNING

DO NOT REMOVE GASOLINE WHILE INSIDE A BUILDING, NEAR A FIRE, OR WHILE YOU SMOKE. GASOLINE FUMES CAN CAUSE AN EXPLOSION OR A FIRE.

TROUBLESHOOTING & REPAIR

At Earthquake, we build quality and durability into the design of our products; but no amount of careful design by us, and careful maintenance by you, can guarantee a repair-free life for your Earthquake String Trimmer. Most repairs will be minor, and easily fixed by following the suggestions in the troubleshooting guide in this section.

The guide will help you pinpoint the causes of common problems and identify remedies.

For more complicated repairs, you may want to rely on your retailer, an authorized service center or Earthquake. A parts breakdown is located toward the end of this manual.

We will always be glad to answer any questions you have, or help you find suitable assistance. To order parts or inquire about warranty, call or email us using the contact information found below.

ORDERING REPLACEMENT PARTS

Parts can be obtained from the store where the string trimmer was purchased or direct from the factory. To order parts visit www.getearthquake.com or call 1-800-345-6007.

For other general questions, you can e-mail us at info@ardisam.com.

Please include the following information with your order:

1) Part numbers
2) Part description
3) Quantity
4) Model number and serial number

TROUBLESHOOTING GUIDE

Trouble	Cause	Correction
Engine does not start	Spark plug wire disconnected	Connect spark plug wire
	Engine not primed	Prime engine
	Defective or incorrectly gapped spark plug	Inspect or replace spark plug
	Fuel tank empty	Add fuel
	Dirty carburetor or fuel line	Clean carburetor or fuel line
	Dirty air filter	Replace air filter
	Carburetor out of adjustment	For carburetor adjustment, take the unit to an authorized service center
	Engine flooded	Wait several minutes before starting
	Throttle control lever in incorrect position	Move throttle lever to FAST or START position
	Stale gasoline	Drain old gasoline and add fresh gas
	Defective throttle control lever or wire	Inspect lever and wire. Replace if damaged or defective.
Engine runs poorly	Bad spark plug	Replace spark plug
	Dirty air filter	Replace air filter
	Carburetor out of adjustment	For carburetor adjustment, take the unit to an authorized service center
	Stale gasoline	Drain old gasoline and add fresh gas
	Engine cooling system clogged	Clean debris screen and engine cooling fins
Engine overheats	Engine cooling system clogged	Clean debris screen and engine cooling fins
	Carburetor out of adjustment	For carburetor adjustment, take the unit to an authorized service center
	Oil level is low	Add oil
Engine will not stop running	Defective throttle control lever or wire	Inspect and replace damaged parts
	Throttle not adjusted properly	Move throttle to the full OFF position
Poor trimming performance	Trimmer line length is too short	Correct line length is 21.5 inches. When the line is less than 1/2 of this length, replace the line.
	Engine not set at FAST speed	Move engine throttle lever to FAST position
Trimmer vibrates	Socket head cap screws for the trimmer head are loose	Tighten socket head cap screws with L-handle wrench
	Trimmer line lengths are substantially different	Adjust trimmer line to approximately equal lengths
	Loose nuts or bolts	Check all bolts and nuts, including engine bolts
	Broken trimmer head	Replace broken part
Trimmer head does not retain line	Trimmer line not properly attached	Follow instructions on decal or in the "Maintenance, Service and Storage" section of the owner's manual
	Broken line retainer	Replace trimmer head assembly
	Trimmer line not correct size	Use a 0.155" diameter trimmer line

NOTE: Please see the engine manual for a full troubleshooting guide for any engine issues.

SLOPE GUIDE

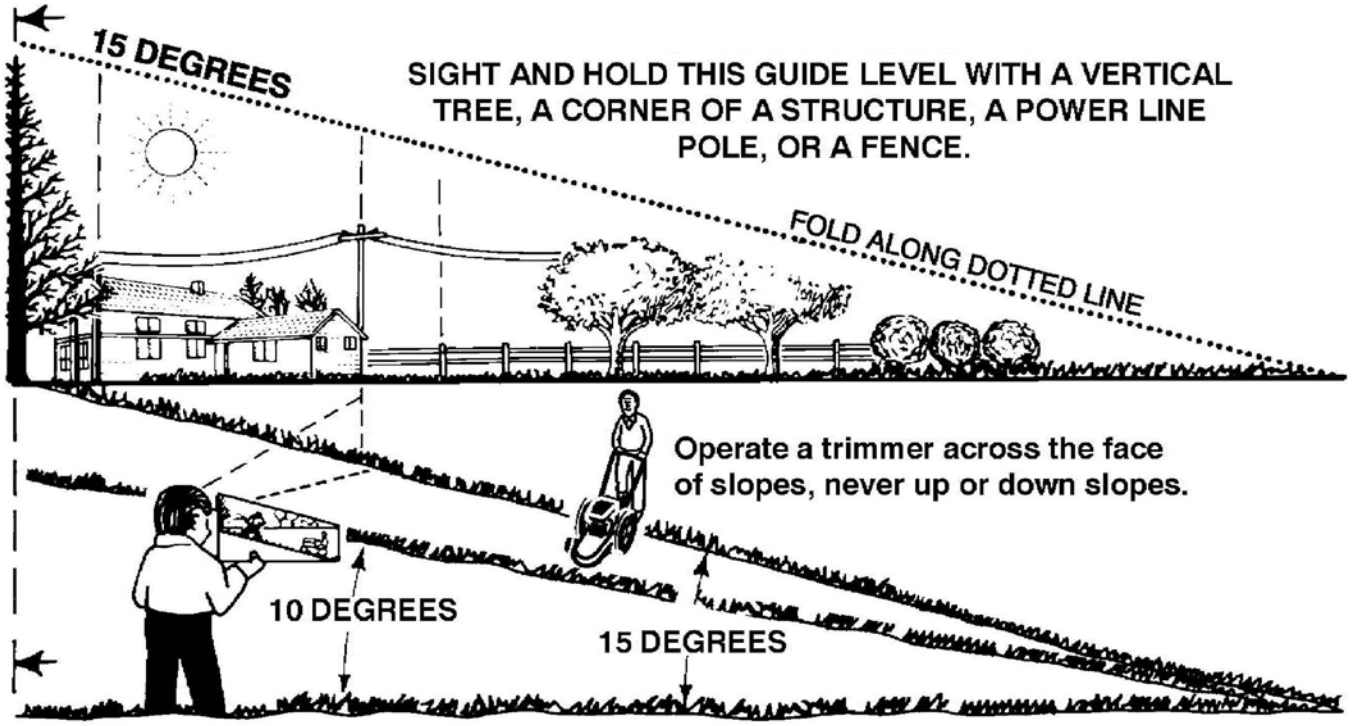

Use this guide and do not trim on a slope greater than 15 degrees.

A 10 degree slope is a hill that increases in height at approximately 1.76 feet in 10 feet.

A 15 degree slope is a hill that increases in height at approximately 2.68 feet in 10 feet.

⚠ WARNING

USE EXTREME CARE AT ALL TIMES AND AVOID SUDDEN TURNS OR MANEUVERS. FOLLOW OTHER INSTRUCTIONS IN THIS MANUAL FOR SAFETY IN TRIMMING ON SLOPES. OPERATE A TRIMMER ACROSS THE FACE OF SLOPES, NEVER UP OR DOWN SLOPES. USE EXTRA CARE WHEN OPERATING ON OR NEAR SLOPES AND OBSTRUCTIONS.

PARTS BREAKDOWN

Handlebars

KEY	PART #	DESCRIPTION	QTY.
1	19942	HANDLEBAR UPPER CAM ADJUST	1
2	19901	GRIP HANDLEBAR FOAM	1
3	19941	HANDLEBAR LOWER CAM ADJUST	1
4	19912	HANDLE PIVOT PLASTIC MOLDING	4
5	19913	CAM LEVER BOLT ASSEMBLY	2
6	19914	THROTTLE CONTROL CABLE 1.5 IN RANGE (FOR 600050V ONLY)	1
	60005039	THROTTLE CONTROL CABLE B & S (FOR 600050B AND 600050BCE ONLY)	1
7	60005019	CABLE CONTROL LATCHING	1
8	19943	LEVER DRIVE ENGAGE	1
9	19911	SCREW M2.9 X 13 PPHAB	8
10	19975	WASHER M3 X 7 X .5 FLAT	8
11	19908	BOLT M6 X 1.0 X 50 PPHMS	2
12	19902	ROPE GUIDE M6 X 1.0 OPEN EYE	1
13	19939	NUT M6 X 1.0 HBW	1
14	W1265V0913	NUT M6 X 1.0 HNYLK GR8.8 ZN	3
15	19910	NUT M8 X 1.25 WBW	2
16	19945	BOLT M8 X 1.25 X 20 HHFCS GR8.8 ZN	4

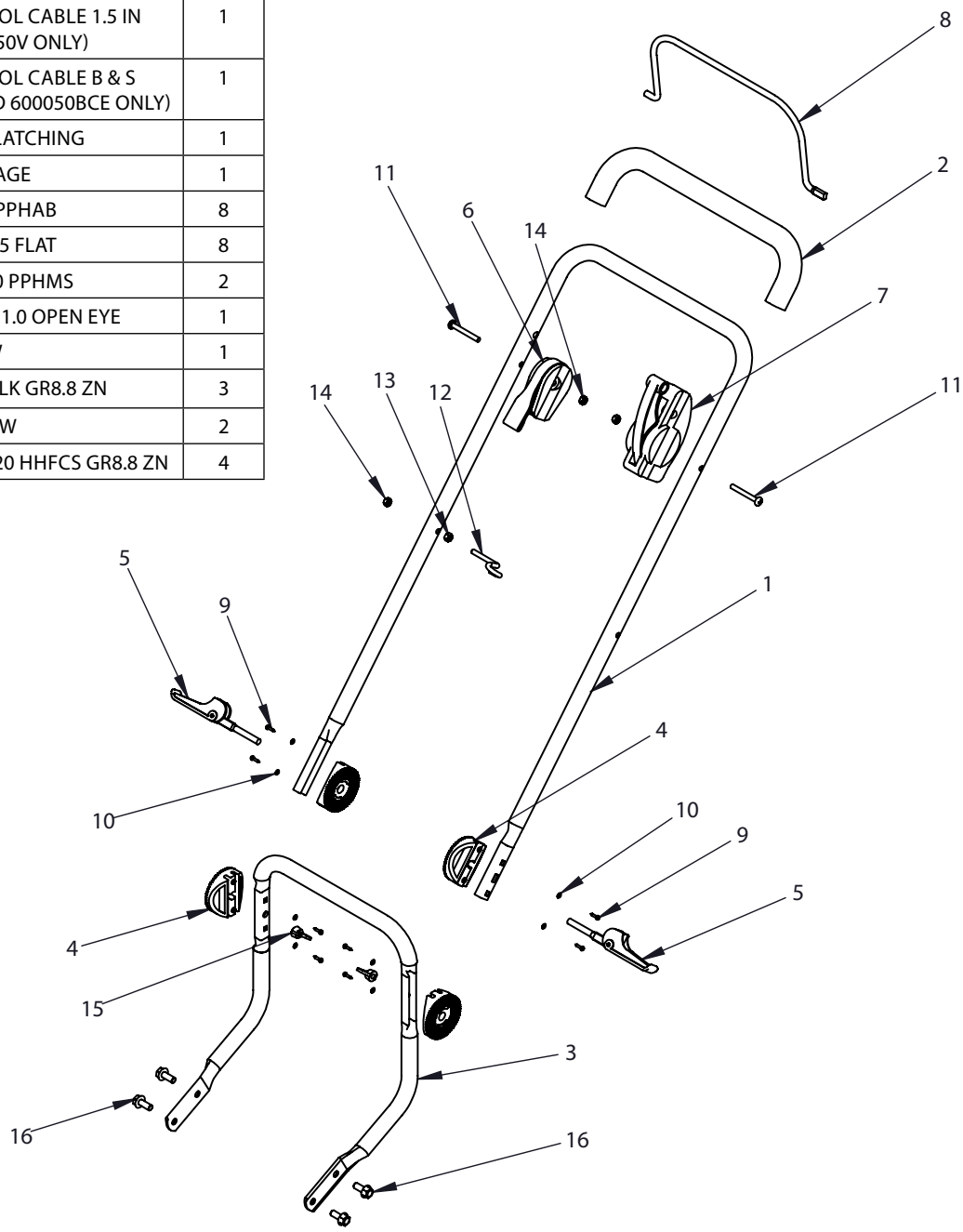

Engine and Pulley Attachment

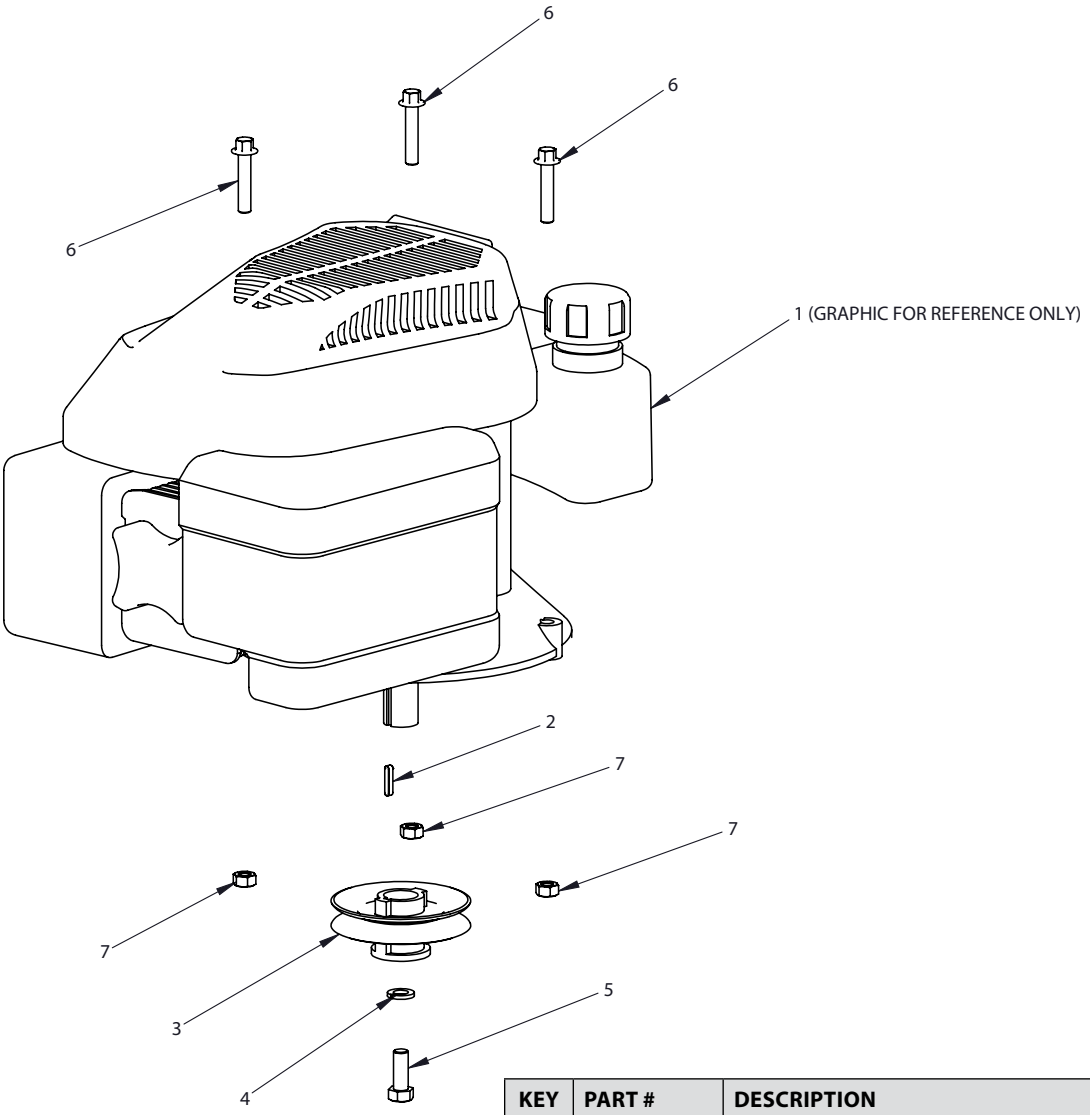

KEY	PART #	DESCRIPTION	QTY.
1	60005072	ENGINE 159CC LONCIN VERT (SHOWN, FOR 600050V ONLY)	1
	60005070	ENGINE VERT BRIGGS 675 ST (NOT SHOWN, FOR 600050B ONLY)	1
	60005071	ENGINE VERT BRIGGS 675 CE ST (NOT SHOWN, FOR 600050BCE ONLY)	1
2	19971	KEY 4MM X 4MM	1
3	19970	PULLEY AND BUSHING WELDMENT (FOR 6000050V ONLY)	1
4	1916965	WASHER LOCK SPRING . 375	1
5	53194	BOLT 3/8-24 X 1 HH GR5 ZN F-T	1
6	19922	BOLT M8 X 1.25 X 40 HHFCS GR8.8 ZN	3
7	W1265V0900	NUT M8 X 1.25 H NYLK GR8.8 ZN	3

Trimmer Head

KEY	PART #	DESCRIPTION	QTY.
1	19928	CUTTING HEAD SHAFT M10 X 1.5 TOP THREAD	1
2	19924	ASSEMBLY CUTTER HEAD AND WRAP METRIC	1
3	19923	HEIGHT GUIDE ASSEMBLY METRIC	1
4	19958	ASSEMBLY JACKSHAFT HOUSING AND BEARINGS	1
5	60005054	WRAP WEED	1
6	19925	SPACER M17.5 X 23.5 X 6	1
7	19929	PULLEY CUTTING HEAD METRIC	1
8	19920	SCREW M5 X 3 X 20 HWHA YLZN	3
9	19919	BOLT M6 X 1.0 X 10 SRHCS	2
10	19926	WASHER M10 X 21 X 1.1 FLAT	1
11	64491	NUT FLANGE M10	1
12	60005009	LINE TRIM .125 X 21.25 RED	2

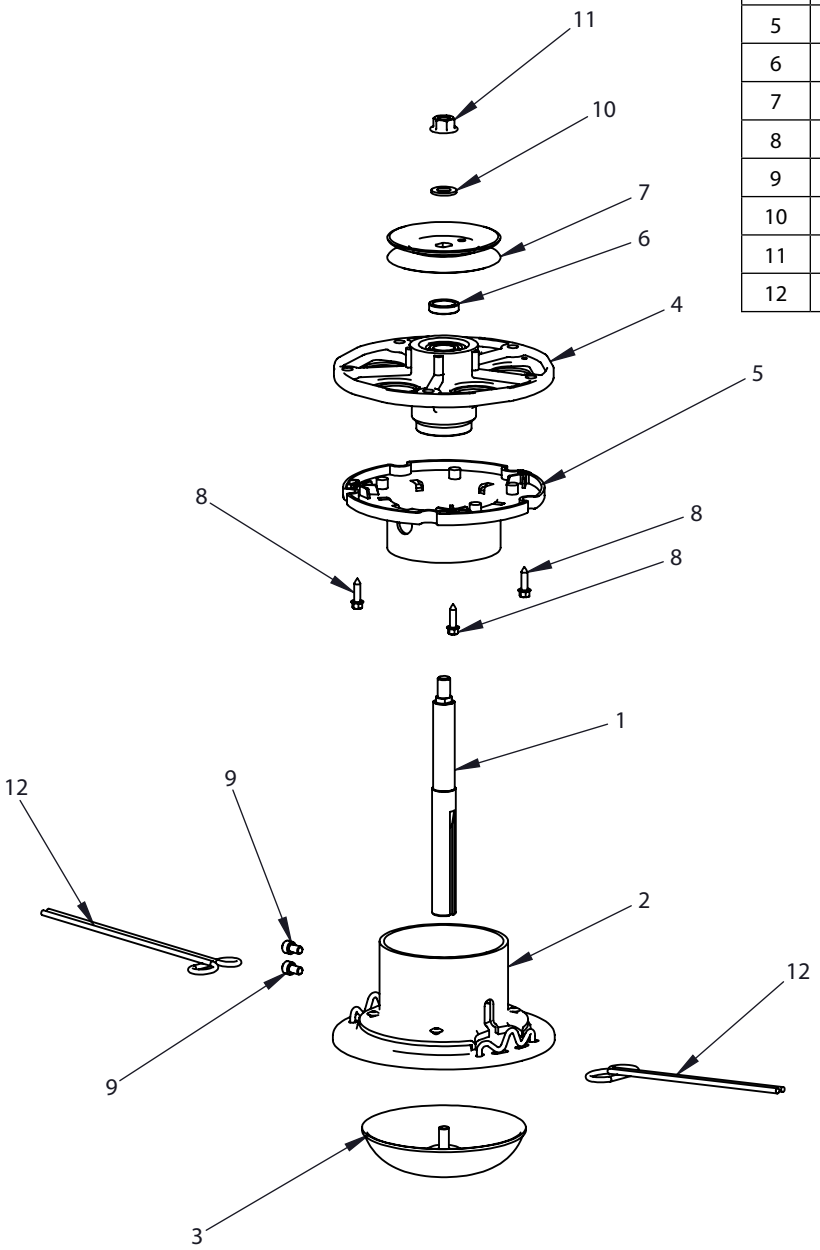

Base Unit

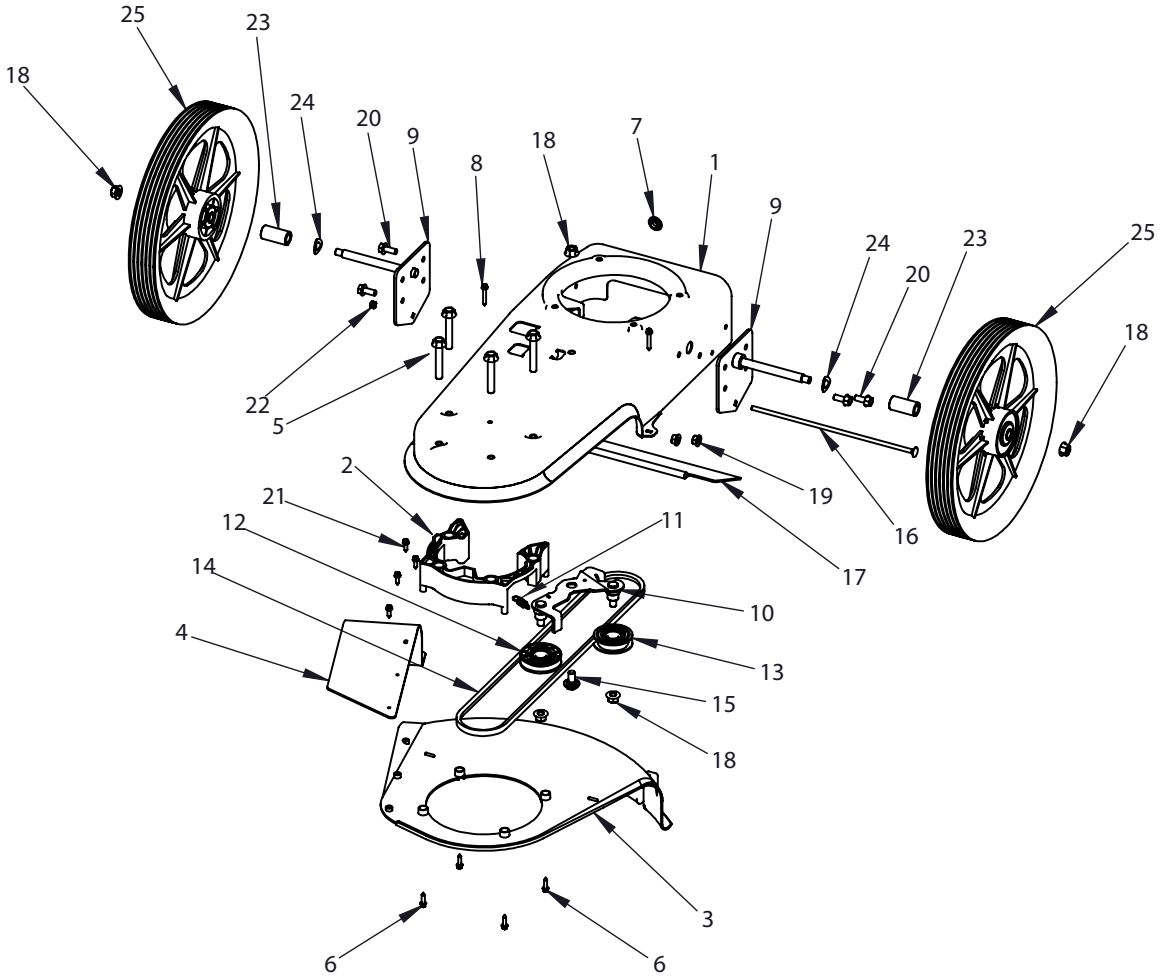

KEY	PART #	DESCRIPTION	QTY.
1	19961	DECK FRAME METRIC	1
2	60005024	JACKSHAFT ASSEMBLY SPACER	1
3	60005021	SHIELD TRIMMER BLK	1
4	60005010	ASSEMBLY GUARD	1
5	19927	BOLT M10 X 1.5 X 60 HHFCS	4
6	19920	SCREW M5 X 3 X 20 HWHA YLZN	4
7	19944	BUSHING M12 X 23 RUBBER	1
8	19940	SCREW M5 X 3 X 30	2
9	19938	AXLE AND BRACKET ASSEMBLY METRIC	2
10	19932	IDLER ASSEMBLY DBL/ZINC METRIC	1
11	60005008	SPRING EXTENSION 1.5LG	1
12	19968	ASSEMBLY V PULLEY AND BEARING	1

KEY	PART #	DESCRIPTION	QTY.
13	19934	ASSEMBLY 3L PULLEY AND BEARING	1
14	60005003	BELT	1
15	19936	BOLT M10 X 1.5 X 20 HHF SHLDR 1	1
16	19937	BOLT M6 X 1.0 X 285 CRG P-T	1
17	60005018	TRAILING SHIELD 13.28 V	1
18	64491	NUT FLANGE M10	5
19	64132	NUT M8 X 1.25 HSF	4
20	19945	BOLT M8 X 1.25 X 20 HHFCS GR8.8 ZN	4
21	19931	SCREW M5 X 3 X 15 PHWH AB	4
22	W1265V0913	NUT M6 X 1.0 HNYLK GR8.8 ZN	1
23	19904	SPACER WHEEL 14 X 22 X 43	2
24	60005029	WASHER SPRING 1/2 X 1 X .021	2
25	19983	ASSEMBLY TIRE RIM AND BEARINGS	2

600050V, 600050B AND 600050BCE ROLLING STRING TRIMMER

WARRANTY TERMS AND CONDITIONS

PRODUCT WARRANTY: 1-YEAR LIMITED WARRANTY

Earthquake, a manufacturing company, warrants this **EARTHQUAKE® ROLLING STRING TRIMMER** to be free from defects in the material or workmanship for a period of one year from the date of purchase. During the one year warranty of this product, Earthquake will furnish 100% parts and labor to correct any defect caused by faulty material or workmanship. Any unit used in a commercial application is covered for a period of 90 days after purchase.

If warranty work needs to be done, contact your place of purchase or Earthquake for an authorized service center in your area. Earthquake will make the necessary repairs if a service center is not available. **To obtain warranty service and/or replacement instructions, you must have prior approval from Earthquake before shipping your package to us by calling our customer service department at 800-345-6007 for a return material authorization number (RMA#).** All items must be shipped prepaid. Earthquake will at no charge, repair or replace, at their discretion, any defective part which falls under the conditions stated above.

Earthquake retains the right to change models, specifications and price without notice. This product if used as intended, will give you years of trouble free service. We hope you will enjoy the quality of our products for years to come.

For replacement parts, phone 800-345-6007 or go online to www.GetEarthquake.com.

This warranty applies to the original owner with a proof of purchase and is not transferable. It supersedes all other warranties either expressed or implied and all other obligations to liabilities on our part. Earthquake does not assume, and does not authorize any other person to assume for us, any liability in connection with the sale of our products.

The warranty applies only to products which have not been subjected to negligent use, misuse, alteration, accident or repairs made by anyone not certified by Earthquake. This guarantee is void unless the warranty card is properly filled out and received by Earthquake within 30 days of purchase or go to www.GetEarthquake.com for online registration.

EARTHQUAKE
A Division of Ardisam, Inc.
1160 Eighth Avenue; P.O. Box 666
Cumberland, Wisconsin 54829
1-800-345-6007 · Fax (715) 822-4180
E-mail: info@ardisam.com

CE Technical File – DP1028

EC DECLARATION OF CONFORMITY

Name and Address of the manufacturer:	*Ardisam Inc.* *1690 Elm St., Cumberland, WI, 54829-9486. USA.*
Name and Address of the Authorised Representative in the European Community:	*Not applicable*
Name and Address of person authorised to compile the technical file:	*Andrew Clark, Designplus (Eng.) Limited* *10 Chapel Lane, West Bergholt, Colchester, Essex. CO6 3EG.United Kingdom*
Description of Equipment:	*Walk-behind, combustion engine powered trimmer*
Model / Type:	*600050B*
Serial No.:	
Directives / Conformity Assessment Procedures:	*Machinery Directive (2006/42/EC) / Annex VIII* *The Noise Emission - Equipment for use Outdoors Directive (2000/14/EC) / Annex V*
Name/address of Notified Body:	*Not applicable*
2000/14/EC information:	
- Measured Sound Power level:	100dB (L_{WA})
- Guaranteed Sound Power level:	102.3dB (L_{WA})
- Sound Power Limit determining factor:	22" cutting width, four cutting elements, 3600 RPM engine speed
Technical standards and specifications:	*EN 14910:2007+A1:2009 – Garden equipment – Walk-behind combustion engine powered trimmers – Safety*
Declaration:	**The person signing below declares that the above named equipment fulfils all the relevant provisions of the stated directives.**
Authorised Signature:	**Name:** *Robert Ruppel* **Position:** *Director of Engineering* **Signature:**
Place of Declaration:	*Ardisam Inc., Cumberland, WI. USA* **Date:** *April 14, 2011*

Page 1 of 1

Doc: DP1028 CE Declaration Iss1

Get parts online at **www.getearthquake.com** or call 800-345-6007 M-F 8-5

NOTES

NOTES

NOTES

Earthquake™, Division of Ardisam, Inc.
1160 8th Avenue, PO Box 666
Cumberland, WI 54829
800-345-6007 | Fax 715-822-2223
Email: info@ardisam.com